A Project On
Android Base Home Automation System Using Arduino and Bluetooth

A project submitted to the Islamic University in partial fulfillment of the requirements for the Degree of Hon's of Science in Electrical & Electronic Engineering (EEE).

Submitted By :

Roll no: 1515032

Reg. no: 1166

Session: 2015-16

Dept. of Electrical & Electronic Engineering
Islamic University, Bangladesh.

DEPT. OF ELECTRICAL & ELECTRONIC ENGINEERING
ISLAMIC UNIVERSITY, BANGLADESH.

Dedicated

To

My Beloved

Parents,

Teachers

And Friends

Certificate

I am pleased to certify that examination Roll no:1515032 & Registration no:1166, has performed a project work entitled "**A Project On Android Base Home Automation System Using Arduino and Bluetooth**" under my supervision in the academic year 2015-2016 for the fulfillment of partial requirement for Degree of Bachelor of Science in Electrical & Electronic Engineering (EEE).So far as I concern this is an original project work that he carried out for four years in the Department of Electrical & Electronic Engineering, Islamic University, Bangladesh.

.....

Signature of the Supervisor

Acknowledgement

Firstly, I wish to express my deepest sense of gratitude to almighty God(Allah) who gave me the strength and power to complete this project work.

I would like to express my whole-hearted gratitude to my honorable supervisor for his continuous guidance, moral support and valuable suggestions throughout my project work. Without his invaluable co-operation, it would not be possible to complete this project work.

I am fortunate to work with unbelievably talented individuals. They are none other than the teachers of my department. My special gratitude goes to them.

I am thankful to Dept. of Electrical & Electronic Engineering, Islamic University, Bangladesh, for the logistic and technical supports provided to complete the project work.

I am greatly indebted to my family members for their love, sympathy, mental and economical support throughout my life.

October,2021

Islamic University, Bangladesh.

Abstract

Automation is a demand in this era of electronic engineering, where a smart control system is used to reduce or replace human operators in the industry, offices or homes to produce some goods or services. Home automation system is the subset of automation system that allows us to control household appliances like light, door, fan, air-conditioner etc. in an intelligent way. It also includes those of domestic activities, such as home entertainment systems, houseplant and yard watering, pet feeding, and the use of domestic robots. Home automation system provides home security and emergency systems to be activated while necessary. It helps handicapped and old aged people which will enable them to control home appliances and alert them in critical situations. It not only refers to reduce human efforts but also energy efficiency and time saving. There are different types of home automation systems in the market. They are generally proprietary and closed, expensive and not very customizable by the end user. To overcome this limitation, there are scopes of research in this area.

The main objective of this project is to develop a home automation system using as Arduino board with Bluetooth being remotely controlled by any Android OS smart phone.As technology is advancing so houses are also getting smarter.Modern houses are gradually shifting from conventional switches to centralized control system, involving remote controlled switches.Presently,conventional wall switches located in different parts of the house makes it difficult for the user to go near them to operate.Even more it becomes more difficult for the elderly or physically handicapped people to do so.Remote control home automation system provides a most modern solution with smart phones.

TABLE OF CONTENTS

Title **Page No.**

Certificate 3
Acknowledge 4
Abstract 5

Chapter 1 **Introduction** **8-11**
1.1 Introduction 8
1.2 Objective with specific aims and possible outcome 11
1.3 Organization of the project report 11

Capter 2 **Automation** **14-21**
2.1 Introducation 14
2.2 Automation system 14
2.2.1 Types of Automation 14
2.2.2 History of Home Automation 18
2.2.3 Advantages and Disadvantages 19
2.2.4 Some off the Applications 20
2.3 Purpose off this project 21

Chapter 3 **Methodology and Design of the Home Automation System** **22-37**

3.1 Introducation 23
3.2 Methodology 23
3.3 Block Diagrem off the Designed project 24
3.4 Description of the Components inn the Block Diagram 25
3.4.1 The Arduino Board 25
3.4.2 Bluetooth HC-05 27
3.4.3 Relay 29
3.5 Flowechart off the Designed project 30
3.6 Circuit Diagram off the project 31

3.6.1 How to connect the Bluetoot HC-05 to the Arduino 32

3.6.2 Setting upp the Relay circuit 33
3.7 Controlling the bulb from your Android device..... 34
3.8 Working..... 35

Chapter 4 Results and Discussions 38-44
4.1 Inotroducation 39
4.2 ProgramCode 39
4.3 Pictorial view off the Designed project 40
4.4List of Components with price 43
4.5 Advantages of the Designed project 43
4.6 Disadvantages of the Designed project 44
4.7 Applications..... 44

Chapter 5 Conclusion 44-45
5.1 Conclusion 46

Chapter 1

Introduction

1.1 Introduction

With advancement of technology things are becoming simpler and easier for us. Automation is the use of control systems and information technologies to reduce the need for human work in the production of goods and services. In the scope of industrialization, automation is a step beyond mechanization. Whereas mechanization provided human operators with machinery to assist them with the muscular requirements of work, automation greatly decreases the need for human sensory and mental requirements as well. Automation plays an increasingly important role in the world economy and in daily experience. Automatic systems are being preferred over manual system.The embedded Bluetooth technology,digital device from a network in which the appliances and device can communicate with other.Today home Automation is one of major applicationsof Bluetooth technology.

Home/office automation is the control of any or all electrical devices in our home or office, whether we are there or away. Home/office automation is one of the most exciting developments in technology for the home that has come along in decades. There are hundreds of products available today that allow us control over the devices automatically, either by remote control; or even by voice command. Home automation (also called domotics) is the residential extension of "building automation". It is automation of the home, housework or household activity. Home automation may include centralized control of lighting, HVAC (heating, ventilation and air conditioning), appliances, and other systems, to provide improved convenience, comfort, energy efficiency and security. Disabled can provide increased quality of life for persons who might otherwise require caregivers or institutional care.

There are few issues involved when designing a home automation system. The system should be scalable so that new devices can easily be integrated into it. It should provide a user- friendly interface on the host side, so that the devices can be easily setup, monitored and controlled This interface should also provide some diagnostic services so that if there is any problem with the system, it can be tracked down. Moreover the overall system should be fast enough to realize the true power of wireless technology. Finally the system should be cost effective in order to justify its application in home automation.

Typically, a new home is outfitted for home automation during construction, due to the accessibility of the walls, outlets, and storage rooms, and the ability to make design changes specifically to accommodate certain technologies. Wireless systems are commonly installed when outfitting a pre-existing house, as they reduce wiring changes. These communicate through the existing power wiring, radio, or infrared signals with a central controller. Network sockets may be installed in every room like AC power receptacles

Home automation is a very promising area. Its main benefits range from increased comfort and greater safety and security, to a more rational use of energy and other resources, allowing for significant savings. It also offers powerful means for helping and supporting the special needs of people with disabilities and, in particular, the elderly. This application domain is very important and will steadily increase in the future.

The concept of networking appliances and devices in the house. Home Automation Systems (HASs) represents a great research opportunity in creating new fields in engineering, architecture and computing (Huidobro and Millan, 2004). HASs becoming popular nowadays and enter quickly in this emerging market. However, end users, especially the disabled and elderly due to their complexity and cost, do not always accept these systems

The reasons for implementing home automation are various, it can increase security of a house, provide energy savings, provide centralized device control, provide device control in the absence of the user, etc. Development of home automation was mainly initiated by the need for security, so various alarm systems were developed, which ensure house-supervision, and in case of any security risk, they activate the alarms, call telephone numbers, etc. For security purposes various other systems were developed, such as systems that simulate the presence of users. In such systems, in the user absence, the blinds are raised or lowered, and lights, audio and video equipment are turned on or off at specified time. Today, home automation includes various systems, such as control of lighting, air conditioning or blinds, security systems, control of audio or video devices, automated flower watering or pet feeding, etc. Also, various access control systems are included in home automation, such as automated control of a garage door or

unlocking the entrance door automatically, e.g. with the use of RFID technology. All of these systems can be connected either by wires or wirelessly.

1.2 Objective with specific aims and possible outcome

The aim of this project is to develop a low cost home automation system. The following objectives will be achieved:

(i) To design the circuit for the proposed system

(ii) To design the firmware of the system

(ii) To simulate the design

(iv) To implement the system in the PCB

(v) To test the functionality of the system in the laboratory

.

The outcome of this project is a prototype of a low cost home automation system.

1.3 Organization of the Project Report

Chapter 1: Introduction: The project documentation starts with the introduction of the Home Automation System with a discussion on the existing systems available. It is followed by objectives and organization of the documentation.

Chapter 2: Automation System: In this chapter, the detailed history or literature review about the automation and home automation system is described along with the purpose of this project work.

Chapter 3: Methodology and Design of the Home Automation System: In this chapter, the detailed description of the components used is described along with the methodology of the project work and procedure of the design process is given including the block diagram, circuit diagram.

Chapter 4: Results and Discussions: In this chapter, the detailed results and discussions of the project work is given along with the working principle, advantages, disadvantages and applications.

Chapter 5: Conclusion: Finally conclusion on the project and recommendations for The future are made.

Chapter 2

Automation System

2.1 Introduction

Nowadays, people have smartphones with them all the time. So it makes sense to use these to control home appliances. Presented here is a home automation system using a simple Android app, which you can use to control electrical appliances with clicks. Commands are sent via Bluetooth(HC05) to Arduino Uno, Which controls the relay operation(ON or OFF). So you need not get up to switch on or switch off the device while watching a movie or doing some work.

2.2 Automation System

Automation or automatic control is the use of various control systems for operating equipment such as machinery, processes in factories, boilers and heat treating ovens, switching in telephone networks, steering and stabilization of ships, aircraft and other applications with minimal or reduced human intervention. Some processes have been completely automated.

The biggest benefit of automation is that it saves labor, however, it is also used to save energy and materials and to improve quality, accuracy and precision.

The term automation, inspired by the earlier word automatic (coming from automaton), was not widely used before 1947, when General Motors established the automation department. It was during this time that industry was rapidly adopting feedback controllers, which were introduced in the 1930s.

Automation has been achieved by various means including mechanical, hydraulic, pneumatic, electrical, and electronic and computers, usually in combination. Complicated systems, such as modern factories, airplanes and ships typically use all these combined techniques.

2.2.1 Types of Automation

One of the simplest types of control is on-off control. An example is the thermostats used on household appliances. Although technically it is a form of automation, its

capabilities are primitive. Old style HVAC systems used crude thermostats that were limited to on-off control, but some modern systems use more sophisticated sensors and digital controllers for variable speed fans or controlling other functions.

Sequence control, in which a programmed sequence of discrete operations is performed, is often based on system logic that involves system states. An elevator control system is an example of sequence control.

The advanced type of automation that revolutionized manufacturing, aircraft, communications and other industries, is feedback control, which is usually continuous 7 and involves taking measurements using a sensor and making calculated adjustments to keep the measured variable within a set range.

(a) Open and Closed Loop

All the elements constituting the measurement and control of a single variable are called a control loop. Control that uses a measured signal, feeds the signal back and compares it to a set point, calculates and sends a return signal to make a correction, is called closed loop control. If the controller does not incorporate feedback to make a correction then it is open loop. An operator monitoring signals from various sensors and manually making corrections either physically, such as turning the handle on a valve, or remotely, such as using a dial on a control panel, is performing open loop control. Timers and sequence controllers using logic, such as those on an elevator, are also open loop.

(b) Feedback Control

Feedback control is accomplished with a controller. To function properly, a controller must provide correction in a manner that maintains stability. The theoretical basis of feedback control is control theory, which also covers servomechanisms, which are often part of an automated system.

Feedback controls are widely used in modern automated systems. A feedback control system consists of five basic components:

(1) input,

(2) process being controlled,

(3) output,

(4) sensing elements, and

(5) controller and actuating devices.

The input to the system is the reference value, or set point, for the system output. This represents the desired operating value of the output. Using the previous example of the heating system as an illustration, the input is the desired temperature setting for a room. The process being controlled is the heater (e.g., furnace). In other feedback systems, the process might be a manufacturing operation, the rocket engines on a space shuttle, the automobile engine in cruise control, or any of a variety of other processes to which power is applied. The output is the variable of the process that is being measured and compared to the input; in the above example, it is room temperature.

The sensing elements are the measuring devices used in the feedback loop to monitor the value of the output variable. In the heating system example, this function is normally accomplished using a bimetallic strip. This device consists of two metal strips joined along their lengths. The two metals possess different thermal expansion coefficients; thus, when the temperature of the strip is raised, it flexes in direct proportion to the temperature change. As such, the bimetallic strip is capable of measuring temperature. There are many different kinds of sensors used in feedback control systems for automation.

The purpose of the controller and actuating devices in the feedback system is to compare the measured output value with the reference input value and to reduce the difference between them. In general, the controller and actuator of the system are the mechanisms by which changes in the process are accomplished to influence the output variable. These mechanisms are usually designed specifically for the system and consist of devices such as motors, valves, solenoid switches, piston cylinders, gears, power screws, pulley systems, chain drives, and other mechanical and electrical components. The

switch connected to the bimetallic strip of the thermostat is the controller and actuating device for the heating system. When the output (room temperature) is below the set point, the switch turns on the heater. When the temperature exceeds the set point, the heat is turned off.

(c) Sequential Control and Logical Sequence or System State Control

Sequential control may be either to a fixed sequence or to a logical one that will perform different actions depending on various system states. An example of an adjustable but otherwise fixed sequence is a timer on a lawn sprinkler.

States refer to the various conditions that can occur in a use or sequence scenario of the system. An example is an elevator, which uses logic based on the system state to perform certain actions in response to its state and operator input. For example, if the operator presses the floor n button, the system will respond depending on whether the elevator is stopped or moving, going up or down, or if the door is open or closed, and other conditions.

Many control applications do not involve analog process variables, that is, the ones which can assume a continuous range of values, but instead variables that are set valued, that is they only assume values belonging to a finite set. The simplest examples of such variables are binary variables, that can have either of two possible values, (such as 1 or 0, on or off, open or closed etc.). These control systems operate by turning on and off switches, motors, valves, and other devices in response to operating conditions and as a function of time. Such systems are referred to as sequence/logic control systems. For example, in the operation of transfer lines and automated assembly machines, sequence control is used to coordinate the various actions of the production system (e.g., transfer of parts, changing of the tool, feeding of the metal cutting tool, etc.).

However, in specific applications they may be viewed as discrete control or sensing devices for two reasons, namely,

1. The inputs to these devices only belong to two specific sets. For example in the control of a reciprocating conveyor system, analog motor control is not

applied. Simple on-off control is adequate. Therefore for this application, the motor-starter actuation system may be considered as discrete.

2. Often the control problem considered is supervisory in nature, where the problem is provide different types of supervisory commands to automatic control systems, which in turn carry out analog control tasks, such that over all system operating modes can be maintained and coordinated to achieve system objectives.

Logic controllers may respond to switches and sensors, and can cause the machinery to start and stop various operations through the use of actuators. Logic controllers are used to sequence mechanical operations in many applications. Examples include elevators, washing machines and other systems with interrelated operations. An automatic sequential control system may trigger a series of mechanical actuators in the correct sequence to perform a task. For example, various electric and pneumatic transducers may fold and glue a cardboard box, fill it with product and then seal it in an automatic packaging machine.

2.2.2 History of Home Automation

Home automation has been a feature of science fiction writing for many years, but has only become practical since the early 20th Century following the widespread introduction of electricity into the home, and the rapid advancement of information technology. Early remote control devices began to emerge in the late 1800s. For example, Nikola Tesla patented an idea for the remote control of vessels and vehicles in 1898. The emergence of electrical home appliances began between 1915 and 1920; the decline in domestic servants meant that households needed cheap, mechanical replacements. Domestic electricity supply, however, was still in its infancy — meaning this luxury was afforded only the more affluent households. Ideas similar to modern home automation systems originated during the World's Fairs of the 1930s. Fairs in Chicago (1934), New York (1939) and (1964–65) depicted electrified and automated homes. In 1966 Jim Sutherland, an engineer working for Westinghouse Electric, developed a home automation system called "ECHO IV"; this was a private project and never commercialized. The first "wired homes" were

built by American hobbyists during the 1960s, but were limited by the technology of the times. The term "smart house" was first coined by the American Association of House-builders in 1984. With the invention of the microcontroller, the cost of electronic control fell rapidly. Remote and intelligent control technologies were adopted by the building services industry and appliance manufacturers. 17 By the end of the 1990s, "domotics" was commonly used to describe any system in which informatics and telematics were combined to support activities in the home. The phrase is a neologism formed from domus (Latin, meaning house) and informatics, and refers to the application of computer and robot technologies to domestic appliances. The concept "Domotique" was initially introduced in France in the 1980s and was during the 1990`s introduced in Spain and Italy as "Domótica", and refers to home automation. Despite interest in home automation, by the end of the 1990s there was not a widespread uptake, with such systems still considered the domain of hobbyists or the rich. The lack of a single, simplified, protocol and high cost of entry has put off consumers. While there is still much room for growth, according to ABI Research, 1.5 million home automation systems were installed in the US in 2012, and a sharp uptake could see shipments topping over 8 million in 2017.

2.2.3 Advantages and Disadvantages

The main advantages of automation are:

i. Increased throughput or productivity.
ii. Improved quality or increased predictability of quality.
iii. Improved robustness (consistency), of processes or product.
iv. Increased consistency of output.
v. Reduced direct human labor costs and expenses.
vi. The following methods are often employed to improve productivity, quality, or robustness.
vii. Install automation in operations to reduce cycle time.
viii. Install automation where a high degree of accuracy is required.
ix. Replacing human operators in tasks that involve hard physical or monotonous work.

x. Replacing humans in tasks done in dangerous environments (i.e. fire, space, volcanoes, nuclear facilities, underwater, etc.).
xi. Performing tasks that are beyond human capabilities of size, weight, speed, endurance, etc.
xii. Reduces operation time and work handling time significantly.

The main disadvantages of automation are:

i. Causing unemployment and poverty by replacing human labor.
ii. Security Threats/Vulnerability: An automated system may have a limited level of intelligence, and is therefore more susceptible to committing errors outside of its immediate scope of knowledge (e.g., it is typically unable to apply the rules of simple logic to general propositions).
iii. Unpredictable/excessive development costs: The research and development cost of automating a process may exceed the cost saved by the automation itself.
iv. High initial cost: The automation of a new product or plant typically requires a very large initial investment in comparison with the unit cost of the product, although the cost of automation may be spread among many products and over time.
v. In manufacturing, the purpose of automation has shifted to issues broader than productivity, cost, and time

2.2.4 Some of the Applications

There are a huge list of applications of automation. Some of them are listed below:

- Automated retail
- Food and drink
- Automated restaurant
- Stores
- Automated mining
- Automated video surveillance
- Automated highway systems
- Automated waste management

- Home automation
- Industrial automation

2.3 Purpose of this Project

The home automation systems are used for controlling the indoor & outdoor lights, heat, ventilation, air conditioning in the house, to lock or open the doors & gates, to control electrical & electronic appliances and so on using various control systems with appropriate sensors

The process of controlling various operating equipment, machinery, factory operations, etc., automatically (sometimes remotely) using control systems can be termed as automation. Automation is an efficient method to use in every field such that to reduce manpower, energy usage and also for improving the quality and efficiency of any system. There are various emerging automation applications and a few can be listed as home automation system, industrial automation system, automated mining system, automated waste management system.

Chapter 3

Methodology and Design of the Home Automation System

3.1 Introduction

In this project there are several components included as each of them have their specific function and task. These components are selected based on circuit reliability, function ability, and costs. At first the methodology is discussed.

3.2 Methodology

- Comparison among three controllers i.e PLC, microcontroller and Arduino. Selection of Arduino over PLC and microcontroller for its overall advantages.
- Designing of the circuit diagram for desired output.
- Selection of HC-05 bluetooth module as receiver.
- Collection of Android application to communicate with Arduino.
- Designing the Arduino program code to implement the project.
- Finally, assembling the equipments according to circuit design.
- Besides, we have theoretically designed an automated motor pump system for a building which can be switched ON/OFF by smart phone via Bluetooth and is automated by PLC.

3.3 Block Diagram of the Designed Project

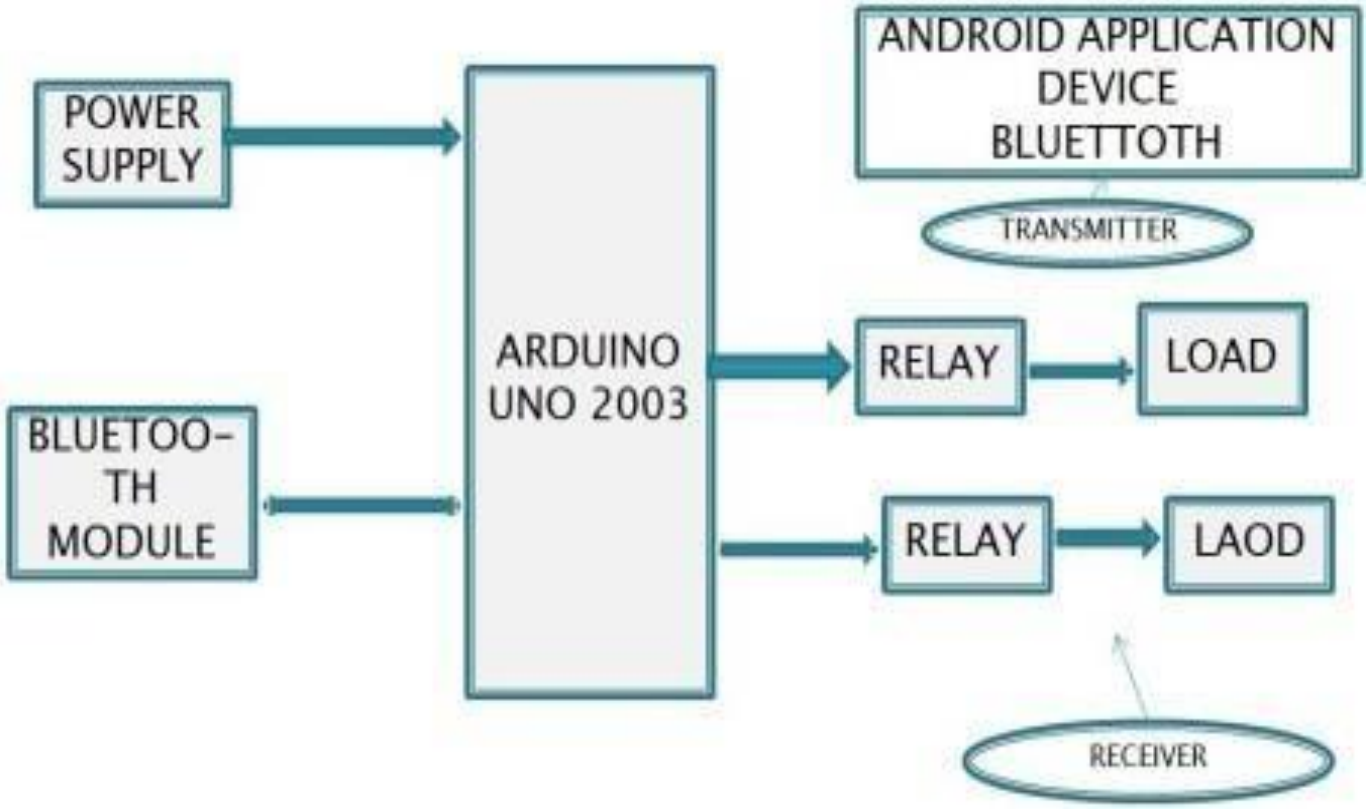

Fig. 3.1: Block diagram of the designed project

3.4 Description of the Components in the Block Diagram

The main components are:

- Arduino Uno
- Bluetooth – HC05
- Relay Board
- Breadboard
- Tungsten Bulb
- Connecting Wires
- AC power supply

3.4.1 The Arduino Board

Arduino board designs use a variety of microprocessors and controllers. The boards are equipped with sets of digital and analog input/output (I/O) pins that may be interfaced to various expansion boards ('shields') or breadboards (for prototyping) and other circuits. The boards feature serial communications interfaces, including Universal Serial Bus (USB) on some models, which are also used for loading programs from personal computers. The microcontrollers can be programmed using the C and C++ programming languages, using a standard API which is also known as the "Arduino language". In addition to using traditional compiler toolchains, the Arduino project provides an integrated development environment (IDE) and a command line tool (arduino-cli) developed in Go.

Arduino board is chosen for this project work as it gives so many facilities. Such as—

1. It is a complete board with PCB and gives very accurate result.
2. It is very easy to implement any project.
3. It is very cost effective with compared to the ordered-given and prepared PCB, so on.

The Arduino UNO board used in this project is given below:

Fig 3.2: The Arduino UNO Board

3.4.2 Bluetooth – HC05

HC-05 module is an easy to use Bluetooth SPP (Serial Port Protocol) module,designed for transparent wireless serial connection setup.The HC-05 Bluetooth Module can be used in a Master or Slave configuration, making it a great solution for wireless communication.This serial port bluetooth module is fully qualified Bluetooth V2.0+EDR (Enhanced Data Rate) 3Mbps Modulation with complete 2.4GHz radio transceiver and baseband. It uses CSR Bluecore 04-External single chip Rluetooth system with CMOS technology and with AFH (Adaptive Frequency Hopping Feature).

The Bluetooth module HC-05 is a MASTER/SLAVE module.By default the factory setting is SLAVE.The Role of the module (Master or Slave) can be configured only by AT COMMANDS.The slave modules cannot initiate a connection to another Bluetooth device, but can accept connections.Master module can initiate a connection to other devices.The user can use it simply for a serial port replacement to establish connection between MCU and GPS, PC to your embedded project, etc.Just go through the datasheet for more details

Hardware Features

- Typical -80dBm sensitivity
- Up to +4dBm RF transmit power.
- 3.3 to 5 V I/O.
- PIO(Programmable Input/Output) control.
- UART interface with programmable baud rate
- With integrated antenna.
- With edge connector.

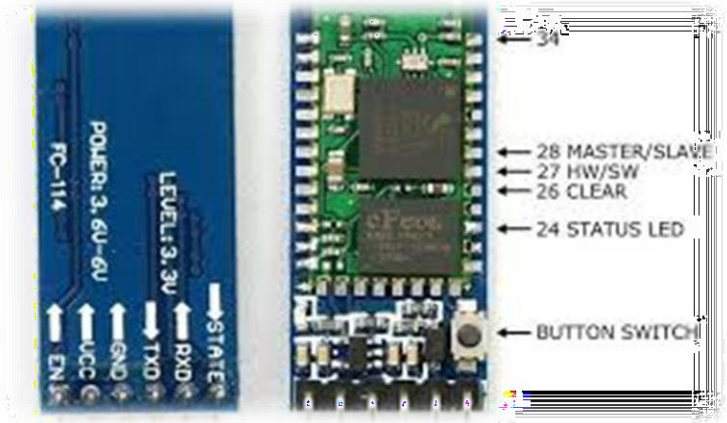

Fig 3.2: Bluetooth – HC05

Pin Description

The HC-05 Bluetooth Module has 6pins. They are as follows:

ENABLE: When enable is pulled LOW, the module is disabled which means the module will not turn on and it fails to communicate. When enable is left open or connected to 3.3V, the module is enabled i.e the module remains on and communication also takes place.
Vcc: Supply Voltage 3.3V to 5V

GND: Ground pin

TXD & RXD: These two pins acts as an UART interface for communication

STATE: It acts as a status indicator. When the module is not connected to / paired with any other bluetooth device, signal goes Low. At this low state, the led flashes continuously which denotes that the module is not paired with other device. When this module is connected to/paired with any other bluetooth device, the signal goes High. At this high state, the led blinks with a constant delay say for example 2s delay which indicates that the module is paired.

BUTTON SWITCH: This is used to switch the module into AT command mode. To enable AT command mode, press the button switch for a second. With the help of AT commands, the user can change the parameters of this module but only when the module is not paired with any other BT device.

3.4.3 Relay

A relay is an electrically operated switch. Many relays use an electromagnet to mechanically operate a switch, but other operating principles are also used, such as solid-state relays. Relays are used where it is necessary to control a circuit by a lowpower signal (with complete electrical isolation between control and controlled circuits), or where several circuits must be controlled by one signal. The first relays were used in long distance telegraph circuits as amplifiers: they repeated the signal coming in from one circuit and re-transmitted it on another circuit. Relays were used extensively in telephone exchanges and early computers to perform logical operations.

Fig 3.3:Relay Board

Basic function of Relay

A simple electromagnetic relay consists of a coil of wire wrapped around a soft iron core, an iron yoke which provides a low reluctance path for magnetic flux, a movable iron armature, and one or more sets of contacts (there are two in the relay pictured). The armature is hinged to the yoke and mechanically linked to one or more sets of moving contacts. It is held in place by a spring so that when the relay is de-energized there is an air gap in the magnetic circuit. In this condition, one of the two sets of contacts in the relay pictured is closed, and the other set is open. Other relays may 33 have more or fewer sets of contacts depending on their function. The relay in the picture also has a wire connecting the armature to the yoke. This ensures continuity of the circuit between the moving contacts on the

armature, and the circuit track on the printed circuit board (PCB) via the yoke, which is soldered to the PCB.

When an electric current is passed through the coil it generates a magnetic field that activates the armature and the consequent movement of the movable contact either makes or breaks (depending upon construction) a connection with a fixed contact. If the set of contacts was closed when the relay was de-energized, then the movement opens the contacts and breaks the connection, and vice versa if the contacts were open. When the current to the coil is switched off, the armature is returned by a force, approximately half as strong as the magnetic force, to its relaxed position. Usually this force is provided by a spring, but gravity is also used commonly in industrial motor starters. Most relays are manufactured to operate quickly. In a low-voltage application this reduces noise; in a high voltage or current application it reduces arcing.

3.5 Flowchart of the Designed Project

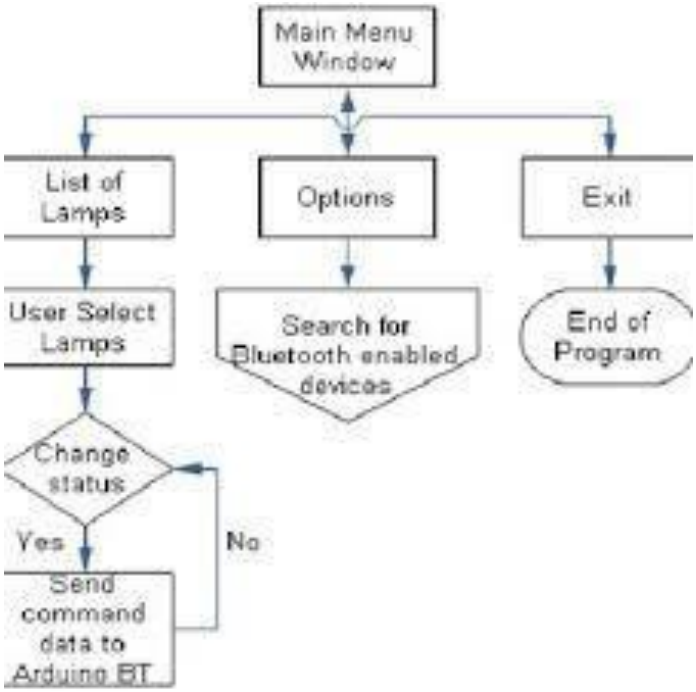

Fig3.4: Flowchart of the Designed Project

3.6 Circuit Diagram of the project

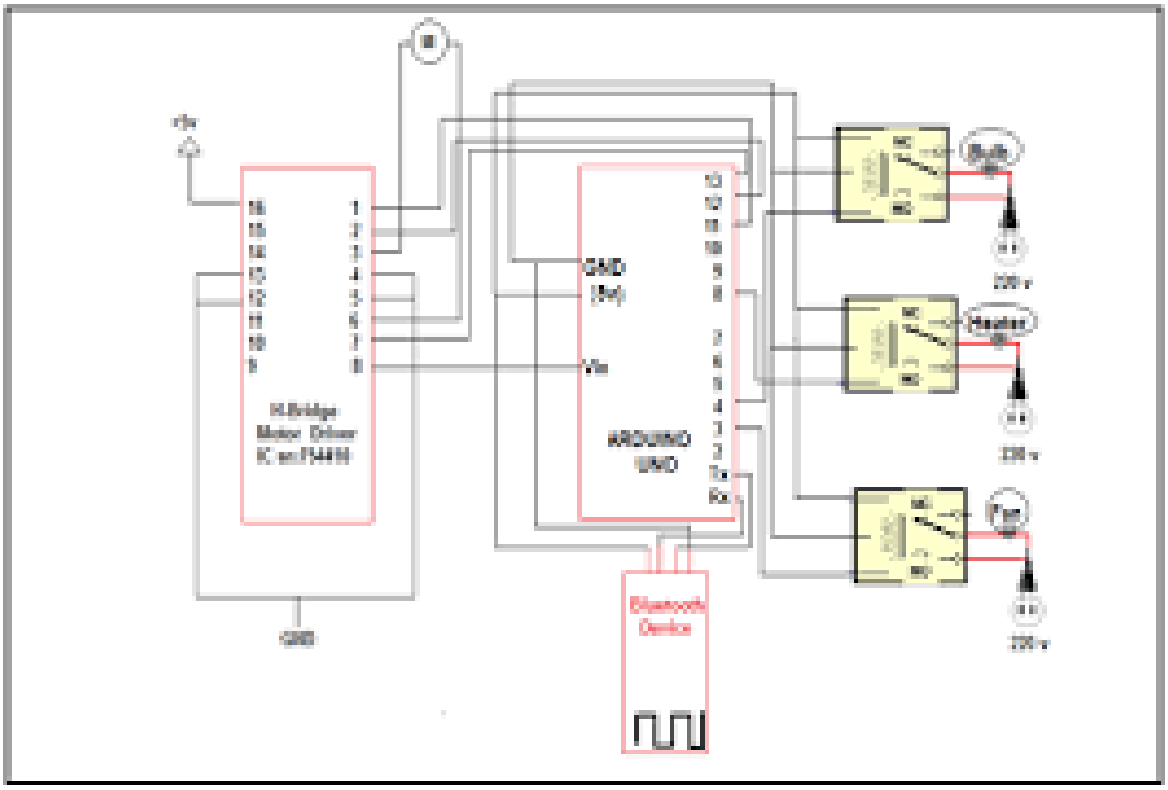

Fig. 3.5: Circuit diagram of the designed project

Designed Project

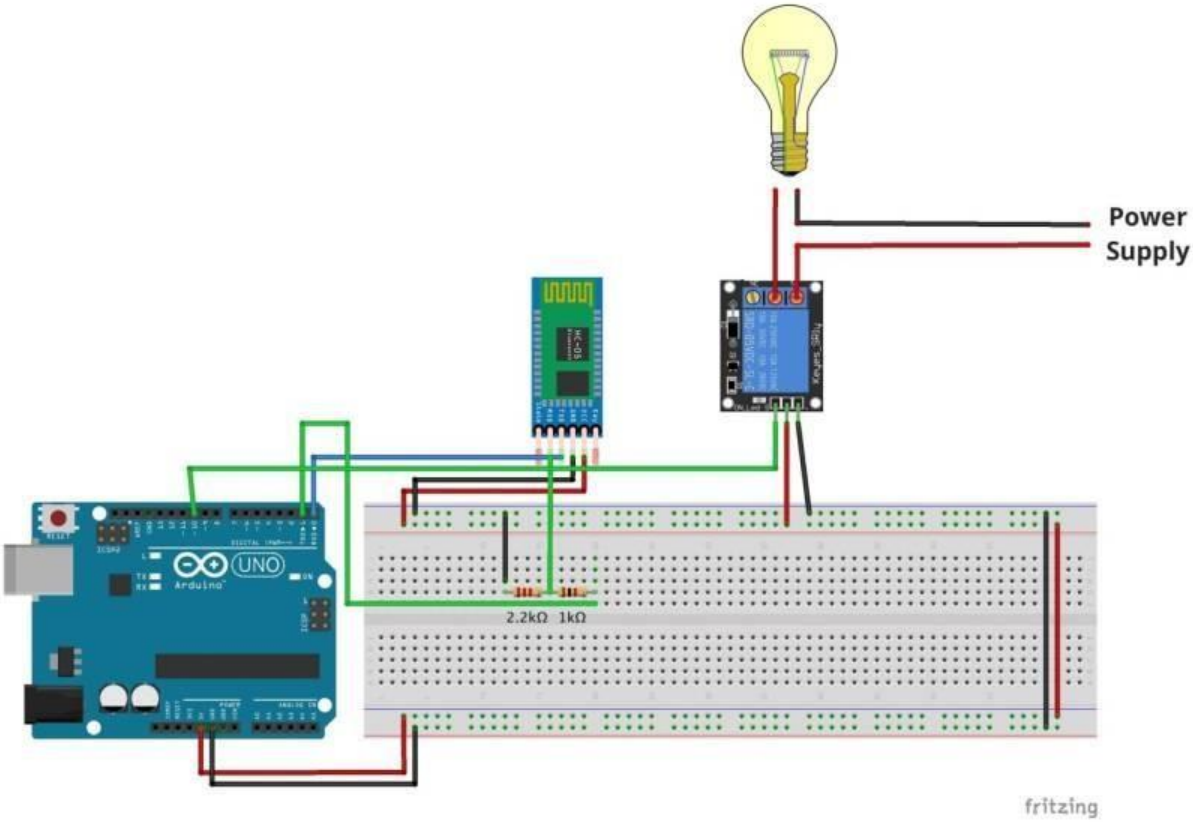

Fig 3.6: Designed Project

3.6.1 How to Connect the Bluetooth HC-05 to the Arduino

1) Connect the Arduino's +5V and GND pins to the bus strips on the breadboard, as shown in the above circuit diagram

2) Power the HC-05 module by connecting the 5V and GND pins to the bus strips on the breadboard. The HC-05 is powered using 5VDC but includes an on-board voltage regulator that generates a 3.3V supply to power the transceiver. This means the TXD/RXD pins operate at only 3.3V.

3) Connect the TXD pin on the HC-05 module with the RXD pin (Pin 0) on the Arduino. This connection allows the HC-05 to send data to the Arduino. The reason why we pair up TXD on the bluetooth module with RXD on the Arduino is simple. The TXD pin is used to transmit data from the bluetooth transceiver, while the RXD pin is used to receive data on the Arduino.

4) Now we need to connect the TXD pin on the Arduino to the RXD pin on the HC-05. This connection will form the second half of the two-way communication and is how the Arduino sends information to the HC-05. As shown in the circuit diagram, we've connected a 1k ohm and a 2.2k ohm resistor across the GND and TXD pins on the Arduino. This is called a resistor divider because it divides down the input voltage. We obtain the 3.3V level signal from the intersection of these two resistors.

The equation for a divided down voltage is Vout = [2.2k/(2.2k + 1k)]*5V = (2.2k/3.2k)*5V = 3.46V, which is close enough to 3.3V to prevent any damage to the HC-05.

Once you have connected the HC-05 module to the Arduino, you can power the Arduino with a 12V DC supply or USB cable. If the red and blue LEDs on the HC-05 are blinking, then you have successfully connected the bluetooth module with the Arduino.

3.6.2 Setting up the Relay Circuit

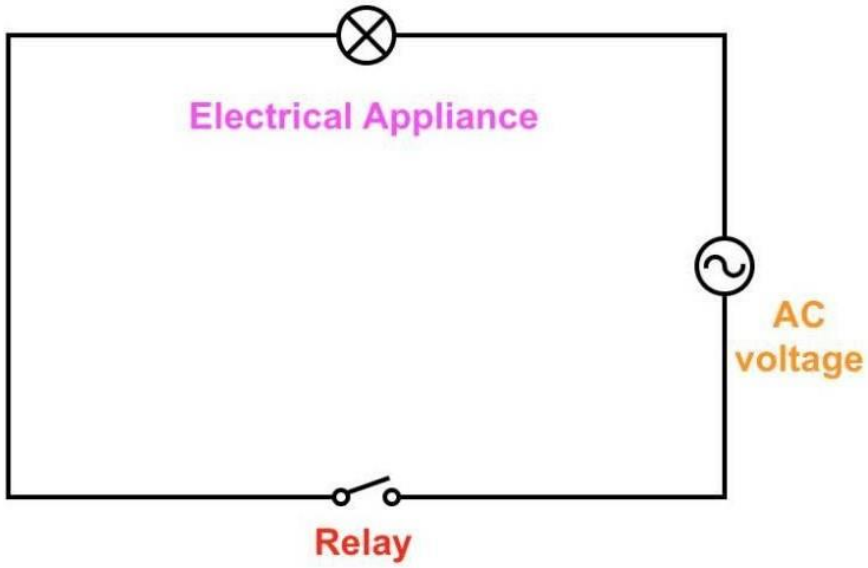

Fig 3.7: Relay Circuit

The next step is to connect the Arduino to a relay module, so that we can turn the connected device ON/OFF. As shown in the circuit diagram above, we'll be connecting the relay module in series with our electrical load, so that we can break the connection when we want to turn the device off and complete the circuit when we want to turn it on. For this application we're using a relay module which includes the relay drive circuit allowing it to connect directly to a microcontroller GPIO pin.

Here's how to connect the relay module to the Arduino:

1) First, connect the 5V and GND pins of the relay module to the bus terminals on the breadboard.

2) Next, connect the IN1 pin on the relay module with PIN 4 on the Arduino. If you have a multi-channel module (2, 4 or 8 channels), you can connect IN2, IN3 … In(n) with different digital pins on the Arduino, and repeat the steps below for configuring the other pins.

3) Now we need to connect the AC load to the relay module. If you look carefully at the terminal block on the relay module, you'll find these three terminals.

3.7 Controlling the bulb from your Android device

Now that we have setup the hardware and successfully uploaded the code, the next step is to control the setup from a smartphone. In order to that, you'll need to download the Arduino Bluetooth Controller app on your Android device.

Here's how to configure your Android device to send commands to the Arduino:

1) Open the app on your smartphone. It will ask for Bluetooth permissions. Click ‘Allow’

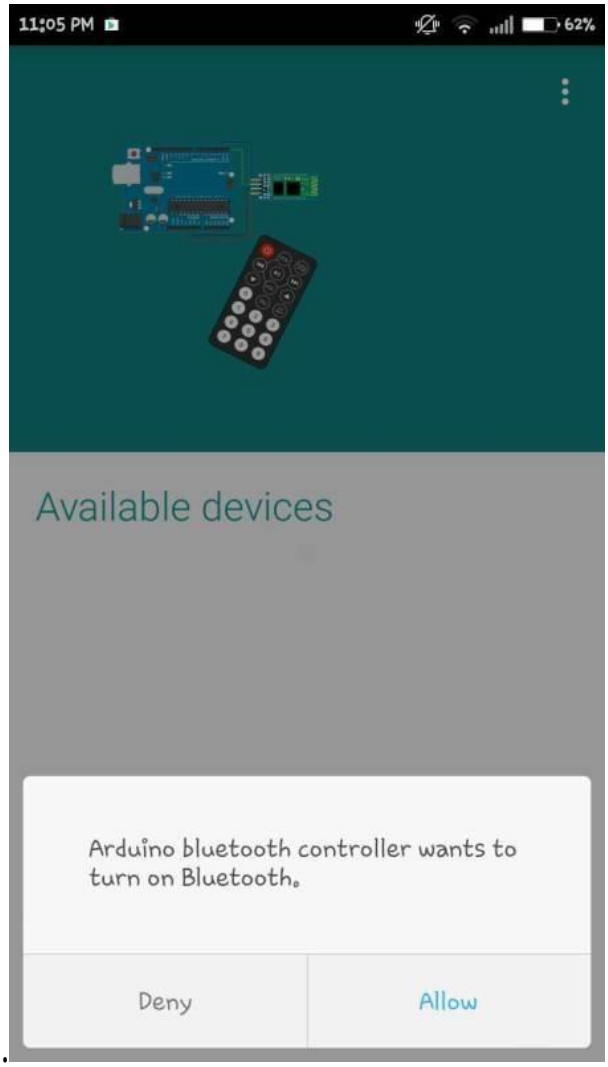

Fig 3.7:Connect with android device step 1

2) Next, it will list all the available devices in your vicinity. Select HC-05.

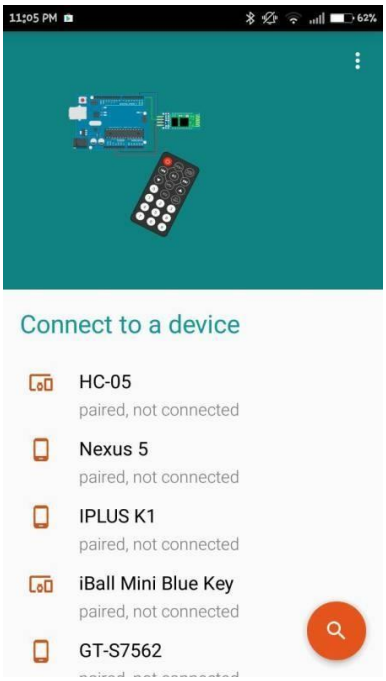

Fig 3.7:Connect with android device step 2

3) Once you select the device, you'll be connected to the HC-05 transceiver. The app will now prompt you to enter the mode that you wish to use.

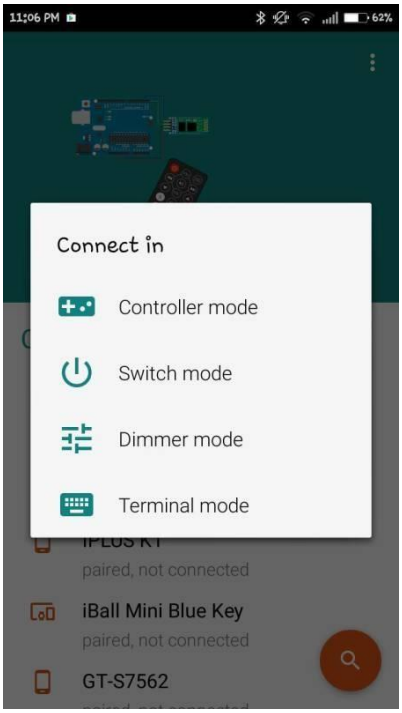

4) You should be redirected to the following screen. Click on the “Settings” icon in the top-right corner of the screen.

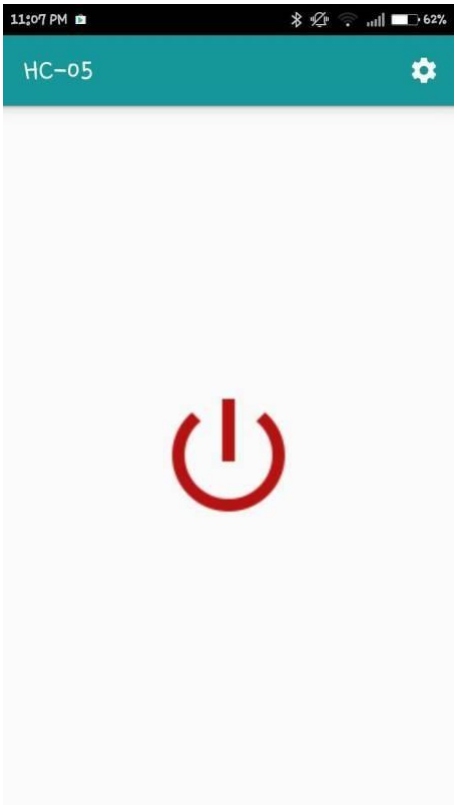

Fig 3.7:Connect with android device step 3

5) It will now ask you to set values for ON and OFF. Enter ‘1’ in the ON textbox and ‘0’ in the OFF textbox. Click Submit.

3.8 Working

After making circuit connection as per the compile the arduino program given below in Arduino IDE and upload program to your Arduino Uno using USB B type data cable. Power up your Arduino using 9v DC adapter. After power up your circuit the lrd on Bluetooth start to blink very fast, it means the Bluetooth device waiting to be pair. Now connect your mobile to HC05 using Bluetooth Controller app. After connecting your mobile to HC05 turn ON and OFF the lights using respective keys.

Chapter 4

Results and Discussions

4.1 Introduction

In this chapter, the detail of the results found of this project has been described including the result, discussions, working principle.

4.2 Program Code

```
String inputs;
#define relay1 2 //Connect relay1 to pin 9
#define relay2 3 //Connect relay2 to pin 8
#define relay3 4 //Connect relay3 to pin 7
#define relay4 5 //Connect relay4 to pin 6
#define relay5 6 //Connect relay5 to pin 5
#define relay6 7 //Connect relay6 to pin 4
#define relay7 8 //Connect relay7 to pin 3
#define relay8 9 //Connect relay8 to pin 2
void setup()
{
Serial.begin(9600); //Set rate for communicating with phone
pinMode(relay1, OUTPUT); //Set relay1 as an output
pinMode(relay2, OUTPUT); //Set relay2 as an output
pinMode(relay3, OUTPUT); //Set relay1 as an output
pinMode(relay4, OUTPUT); //Set relay2 as an output
pinMode(relay5, OUTPUT); //Set relay1 as an output
pinMode(relay6, OUTPUT); //Set relay2 as an output
pinMode(relay7, OUTPUT); //Set relay1 as an output
pinMode(relay8, OUTPUT); //Set relay2 as an output
digitalWrite(relay1, LOW); //Switch relay1 off
digitalWrite(relay2, LOW); //Swtich relay2 off
digitalWrite(relay3, LOW); //Switch relay1 off
digitalWrite(relay4, LOW); //Swtich relay2 off
digitalWrite(relay5, LOW); //Switch relay1 off
digitalWrite(relay6, LOW); //Swtich relay2 off
digitalWrite(relay7, LOW); //Switch relay1 off
digitalWrite(relay8, LOW); //Swtich relay2 off
}
void loop()
{
while(Serial.available()) //Check if there are available bytes to read
{
delay(10); //Delay to make it stable
char c = Serial.read(); //Conduct a serial read
if (c == '#'){
```

```
  break; //Stop the loop once # is detected after a word
  }
  inputs += c; //Means inputs = inputs + c
  }
  if (inputs.length() >0)
  {
  Serial.println(inputs);

if(inputs == "A")
{
digitalWrite(relay1, LOW);
}
else if(inputs == "a")
{
digitalWrite(relay1, HIGH);
}
else if(inputs == "B")
{
digitalWrite(relay2, LOW);
}
else if(inputs == "b")
{
digitalWrite(relay2, HIGH);
}
else if(inputs == "C")
{
digitalWrite(relay3, LOW);
}
else if(inputs == "c")
{
digitalWrite(relay3, HIGH);
}
else if(inputs == "D")
{
digitalWrite(relay4, LOW);
}
else if(inputs == "d")
{
digitalWrite(relay4, HIGH);
}
else if(inputs == "E")
{
```

```
digitalWrite(relay5, LOW);
}
else if(inputs == "e")
{
digitalWrite(relay5, HIGH);
}
else if(inputs == "F")
{
digitalWrite(relay6, LOW);
}
else if(inputs == "f")
{
digitalWrite(relay6, HIGH);
}
else if(inputs == "G")
{
digitalWrite(relay7, LOW);
}
else if(inputs == "g")
{
digitalWrite(relay7, HIGH);
}
else if(inputs == "H")
{
digitalWrite(relay8, LOW);
}
else if(inputs == "h")
{
digitalWrite(relay8, HIGH);
}
inputs="";
}
}
```

4.3 Pictorial View of the Designed Project

The following picture shows the different parts of the designed project in the pictorial view format.

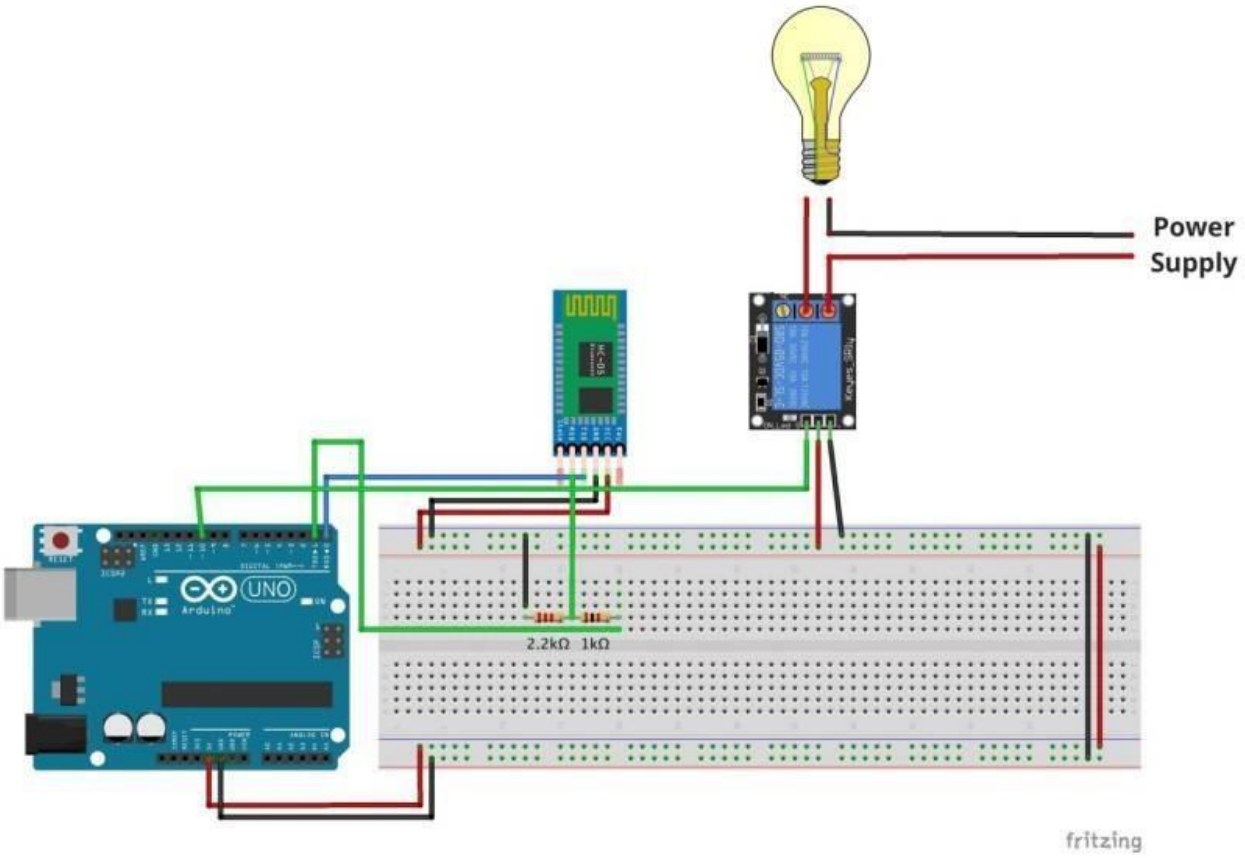

Fig 3.8: Pictorial View

Then 9th and 10th pin of Arduino uno is connected to R1 and R2 of relay board. Vcc and GND pin of relay board is connected to Vin (+9v) and GND pin of Arduino Uno. Another side of relay board three pin connector available, named NO(Normally open), C (common) and NC(Normally closed). Each relay contains separate connector. Phase(P) of 230v AC is connected to C (common) and one end of bulb is connected to NO(normally open). Another end of bulb is connected to Neutral(N) of AC supply.

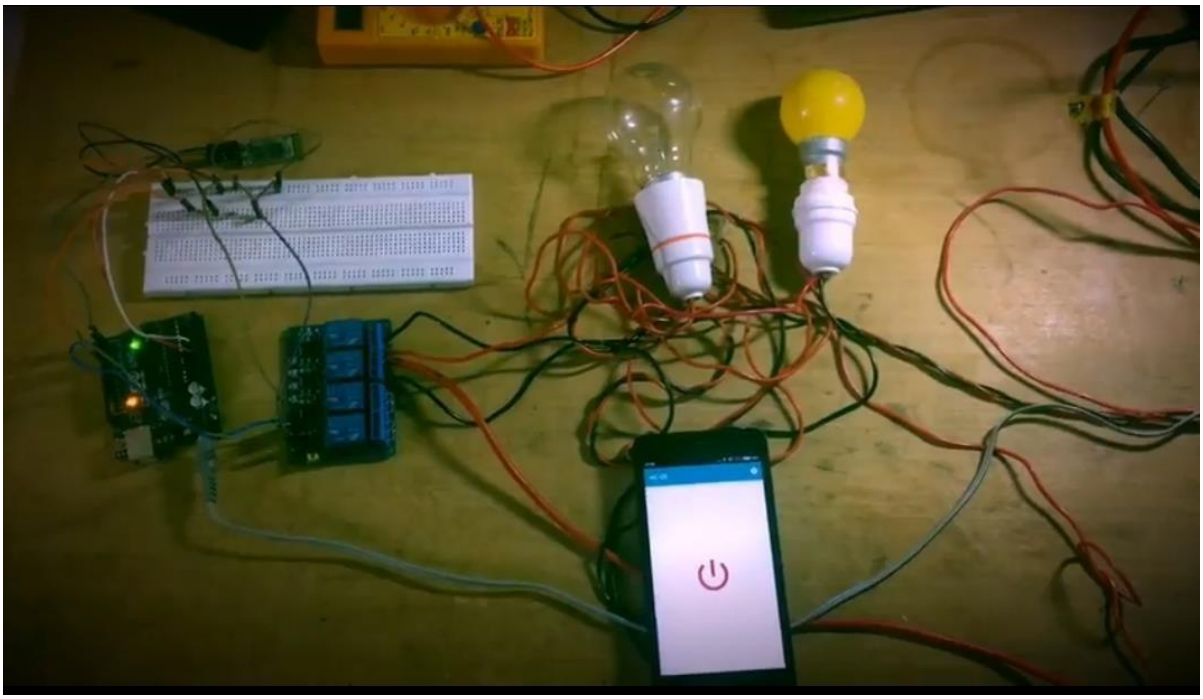

Fig 3.9

After making circuit connection as per the fig 1.1 compile the arduino program given below in Arduino IDE and upload program to your Arduino Uno using USB B type data cable. Power up your Arduino using 9v DC adapter. After power up your circuit the lrd on Bluetooth start to blink very fast, it means the Bluetooth device waiting to be pair. Now connect your mobile to HC05 using **Bluetooth** Controller app. After connecting your mobile to HC05 turn ON and OFF the lights using respective keys.

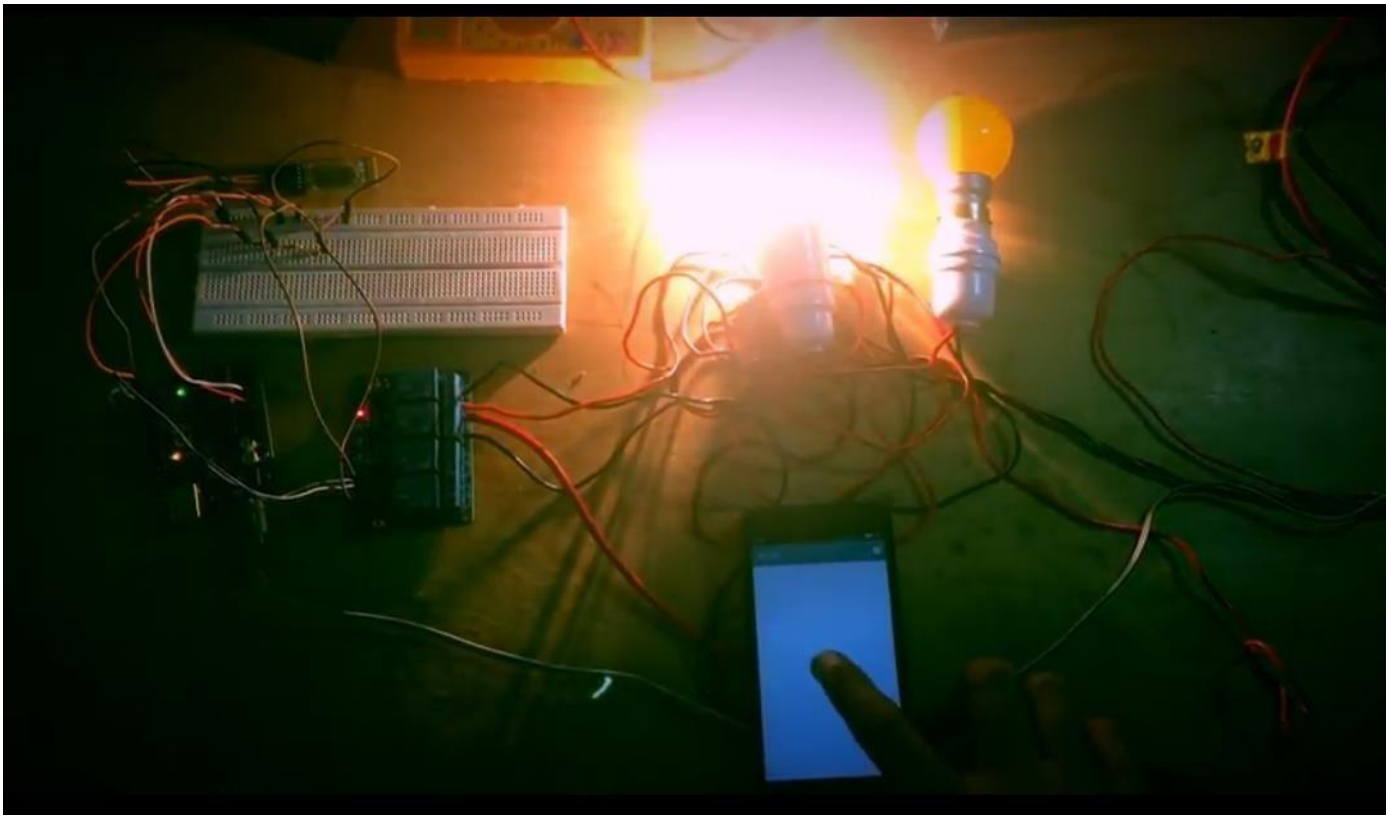

Fig 4.1: Pictorial View

You are now ready to control the appliances using the app. You can either use on/off buttons to control the appliances. You can control more electrical appliances by increasing the number of channels in the relay. For instance, using an 8-channel relay, you can control up to eight devices. For this, you need to alter the source code by adding input commands and voice commands to control the devices.

4.4 List of Components with Price

SI. NO.	Name of the Component	Quantity	Unit Price	Price (BDT)
1	Arduino Uno	1	465	465
2	Bluetooth – HC05	1	299	299
3	Relay Board	1	210	210
4	Breadboard	1	65	65
5	Others	-	100	100
Total = One thousand one hundred thirty nine taka only				1139/=

4.5 Advantages of the Designed Project

- High efficiency
- Cost effective
- Small in size thus portable
- Low power consumption
- Reliable
- High sensitivity or quick responsiveness
- Very easy to implement

4.6 Disadvantages of the Designed Project

The disadvantages are mentioned below:

- It takes 30 seconds to be ready
- The motions have to be continuously in order to keep turning on the lights or electrical devices.

4.7 Applications

This device can be used in the following places after changing the code (if required) –

- Lifts
- Gates
- Offices
- Home
- Secured places to observe motion
- Industries

And in many more places.

Chapter 5

Conclusion

5.1 Conclusion

The project has proposed the idea of smart homes that can support a lot of home automation systems. A smart home contains a connection between wireless communication, sensors, monitoring and tracking. Smart homes are a huge system that includes multiple technologies and applications that can be used to provide security and control of the home easily.

This project discussed the designed modules like sensors' circuits, monitoring and tracking of the home through IP camera, mobile notifications and home navigator.

Home Automation is undeniably a resource which can make a home environment automated. People can control their electrical devices via these Home Automation devices and set up controlling actions through Mobile.

In future this product may have high potential for marketing. Further it can be demonstrated from computer instead of mobile phone for controlling the appliances of any larger places like industries, hospitals, institutions etc centrally.

Home Automation is undeniably a resource which can make a home environment automated. People can control their electrical devices via these Home Automation devices and set up the controlling actions in the computer. We think this product have high potential for marketing in the future.

Reference

[1] Panth, S, Jivani, M., 'Home Automation System (HAS) using Android Mobile Phone', International Journal of Electronics and Computer Science Engineering (IJECSE), Vol. 3

[2] Ramlee, R. A., Leong, M. H., Singh, R. S. S., Ismail, M. M., Othman, M. A., Sulaiman, H., A., Misran, M. H., Said, M. A. M., 'Bluetooth Remote Home Automation System Using Android Application', The International Journal of Engineering And Science (IJES), Vol. 2

[3] Sriskanthan, N, Karand, T., "Bluetooth Based Home Automation System". Journal of Microprocessors and Microsystems, Vol. 26, pp.281-289, 2002.

Others:

www.wikipidia.org

www.google.com

www.quora.com

`